BDCM Series

Coreless Precious Metal Brushed DC Motor



BDCM1725 Motor Data 4-8W

Motor Model	Unit	BDCM1725-01	BDCM1725-02	BDCM1725-03	BDCM1725-04
Value at Rated voltage					
At Nominal					
1. Nominal voltage	V/DC	6	9	12	24
2. Nominal speed	rpm	8000	8000	8000	8000
3. Nominal current	A	0.41	0.28	0.24	0.14
4. Nominal torque	mNm	2.19	2.06	2.68	2.72
Free Load					
5. No-load speed	rpm	10000	10000	10000	10000
6. No-load current	mA	23	30	20	8
At Max. Efficiency					
7. Max. efficiency	%	79.5	71.5	77.5	81.4
8. Speed	rpm	9000	8650	9100	9100
9. Current	A	0.22	0.20	0.12	0.09
10. Torque	mNm	1.10	1.39	1.21	1.22
At Max. Output power					
11. Max.output power	W	2.87	2.70	3.50	3.56
12. Speed	rpm	5000	5000	5000	5000
13. Current	A	0.99	0.65	0.60	0.31
14. Torque	mNm	5.48	5.16	6.75	6.80
At Stall					
15. Stall current	A	1.96	1.26	1.21	0.61
16. Stall torque	mNm	11.0	10.3	13.4	13.6
Motor Constants					
17. Terminal resistance	Ω	3.06	7.14	5.71	22.86
18. Terminal inductance	mH	0.10	0.20	0.28	0.93
19. Torque constant	mNm/A	5.66	8.39	11.30	22.70
20. Speed constant	rpm/V	1666.7	1111.1	833.3	416.7
21. Speed/torque constant	rpm/mNm	911.7	969.1	746.0	735.0
22. Mechanical time constant	ms	7.4	7.9	4.2	3.6
23. Rotor inertia	gcm²	0.78	0.78	7.80	0.82
24. Number of pole pairs			1		
25. Number of phase			5		
26. Weight of motor	g		28		
27. Typical noise level	dB		≤38		

Motor Drawing (mm) Φ17*L25mm

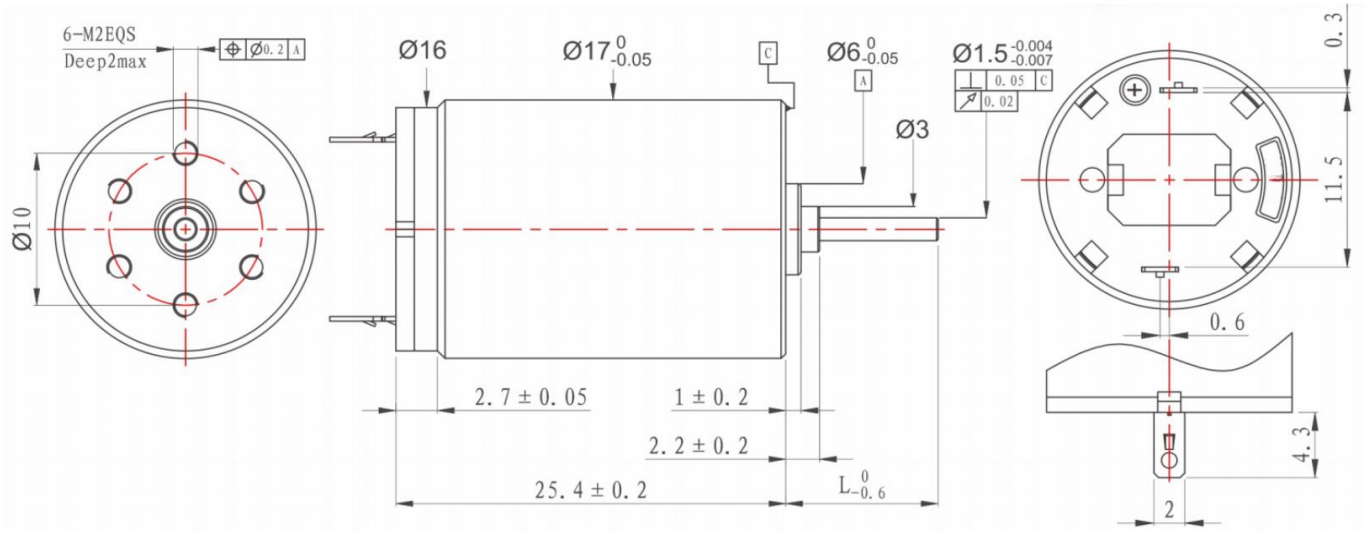

Technical Specifications

1. Axial play: 0.05–0.15 mm
2. Sintered metal bearing load limits:

- Max. axial load (dynamic): 0.5 N
- Max. radial load (5 mm from flange): 1.2 N

1. Sintered metal bearing radial play: ≤0.03 mm
2. Rolling bearing radial play: ≤0.015 mm
3. Ambient temperature range: -20 to +80°C
4. Relative humidity range: <90% (25°C)
5. Highest rotor temperature: 125°C

Values listed in the table are nominal.

Motor terninal definition

1. \+ Vcc
2. \- GND

Optional Parts

1. Planetary gearbox
2. Photoelectric encoder/magnetoelectric encoder

